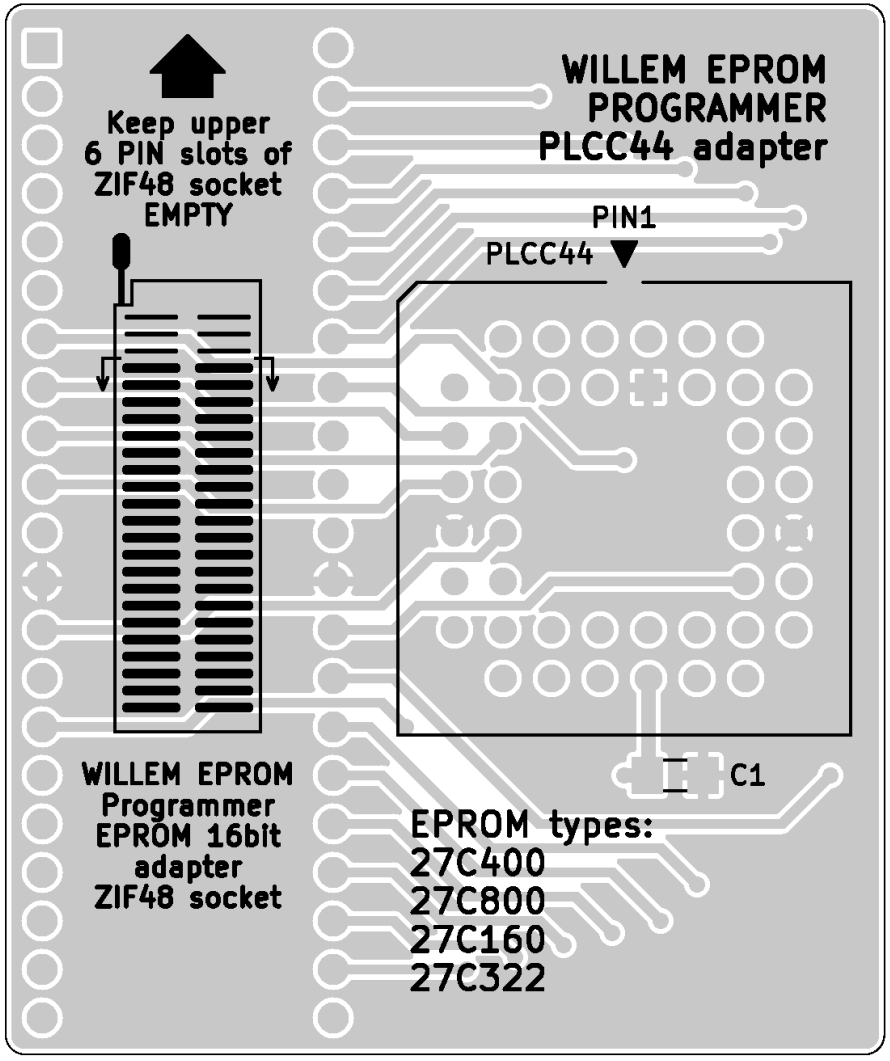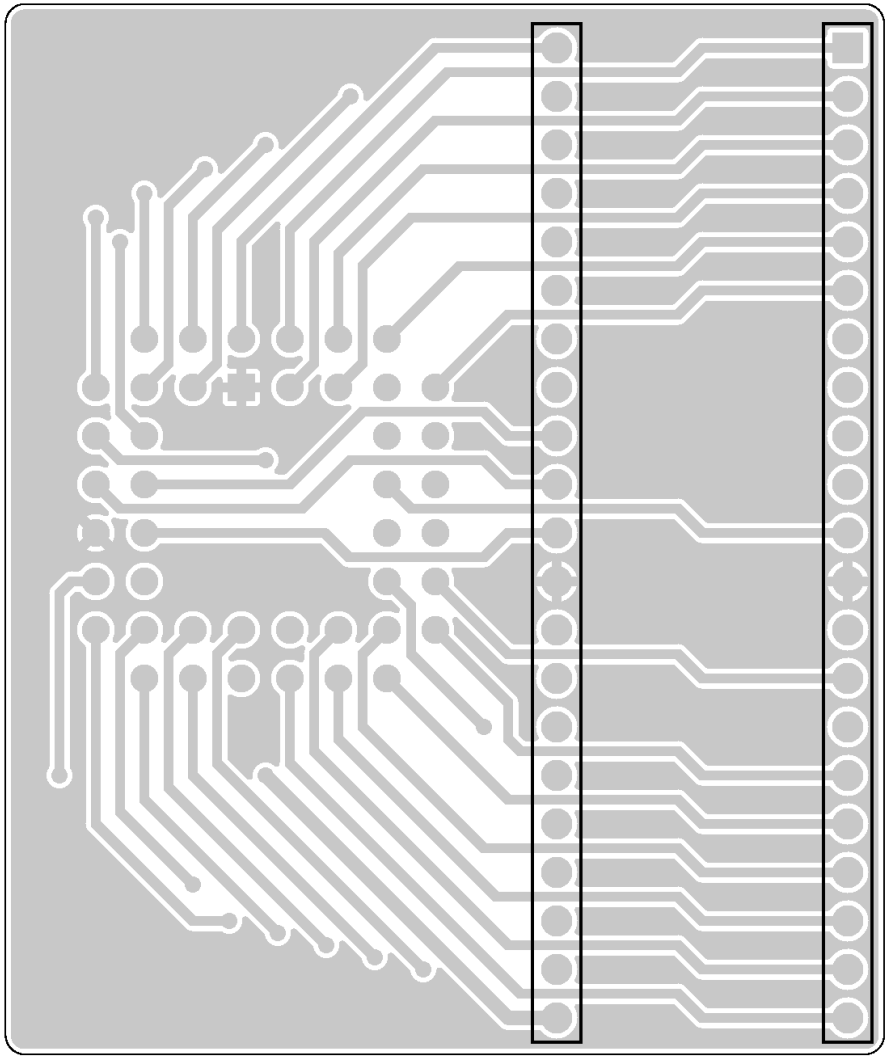
WILLEM EPROM
PROGRAMMER
PLCC44 adapter
Keep upper
6 PIN slots of
ZIF48 socket
EMPTY
PIN1
PLCC44
C1
WILLEM EPROM
Programmer
EPROM 16bit
adapter
ZIF48 socket
EPROM types:
27C400
27C800
27C160
27C322